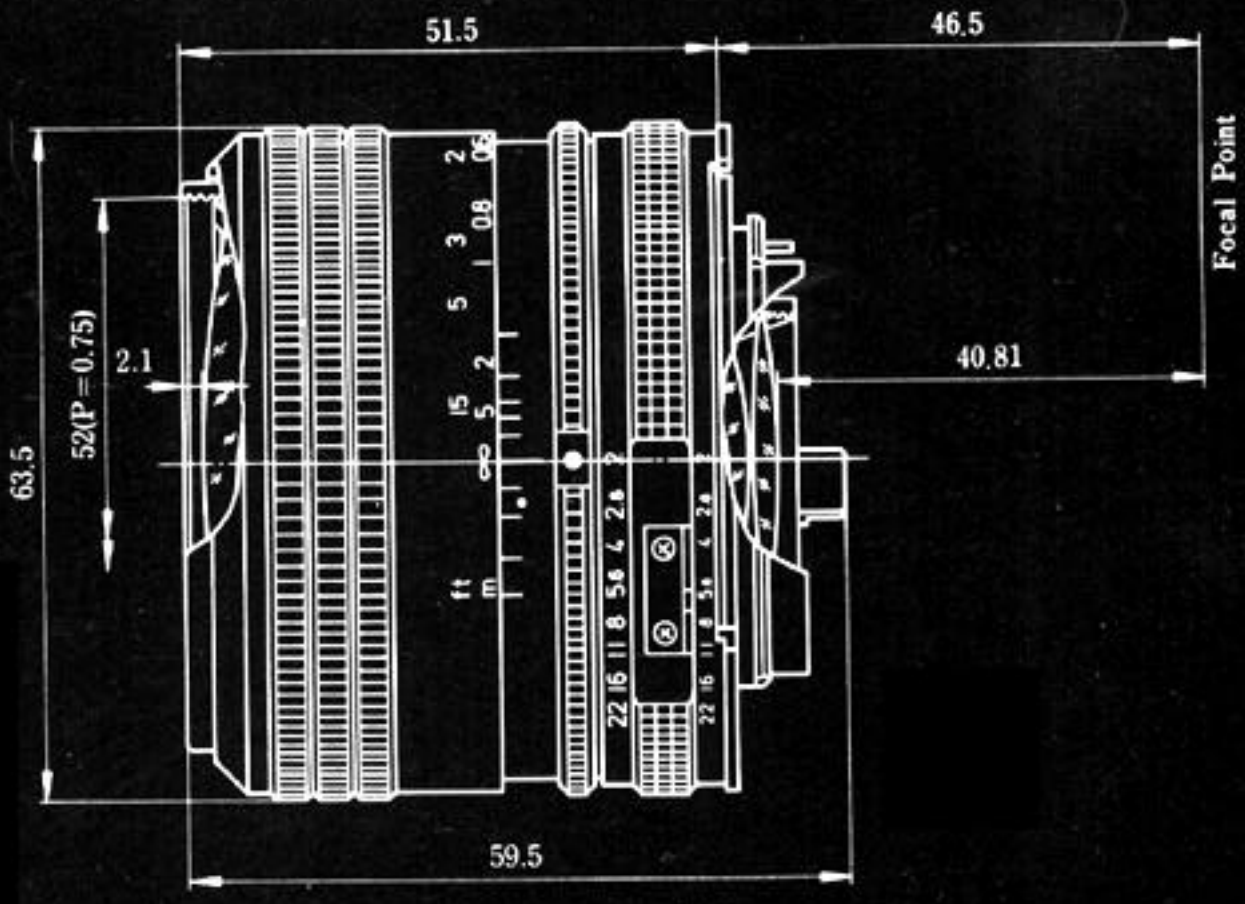
51.5
46.5
Focal Point
40.81
2.1
52(P=0.75)
63.5
59.5
ft
m

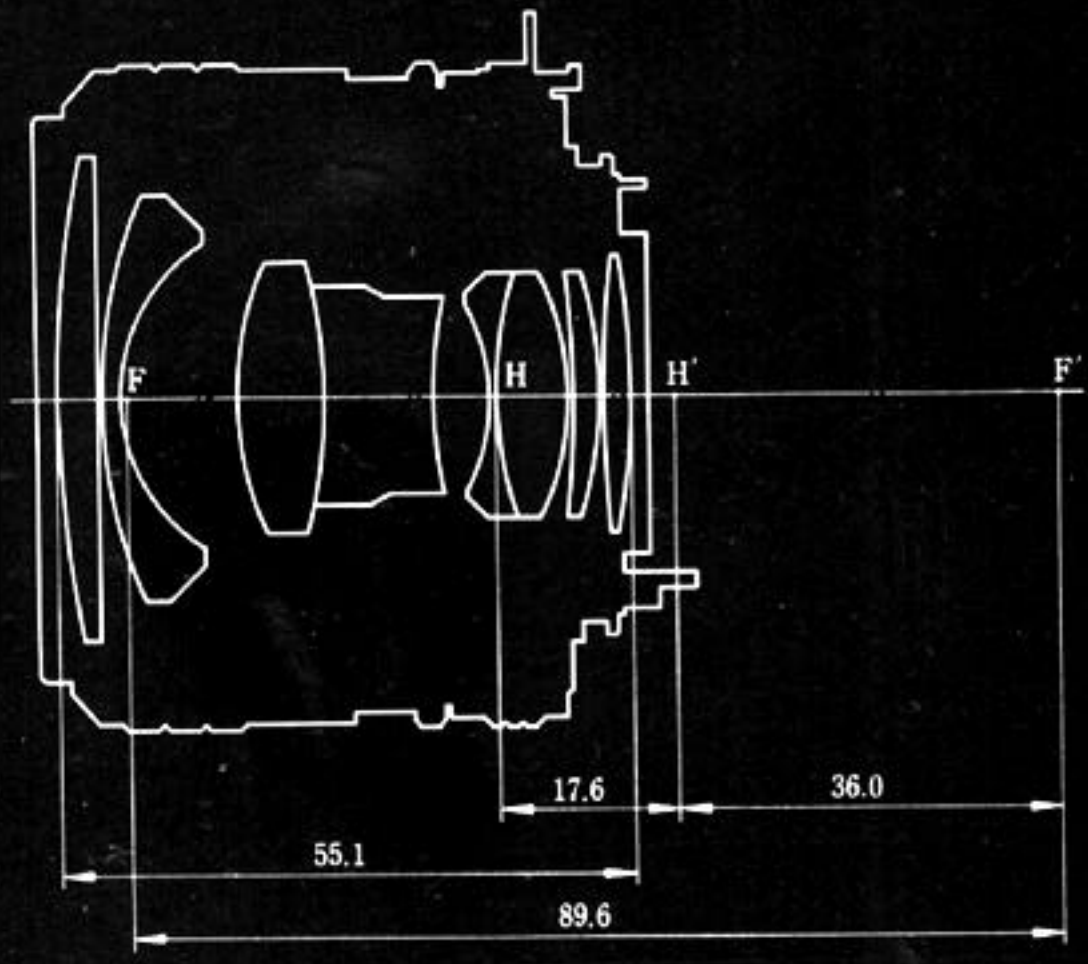
F
H
H'
F'
17.6
36.0
55.1
89.6